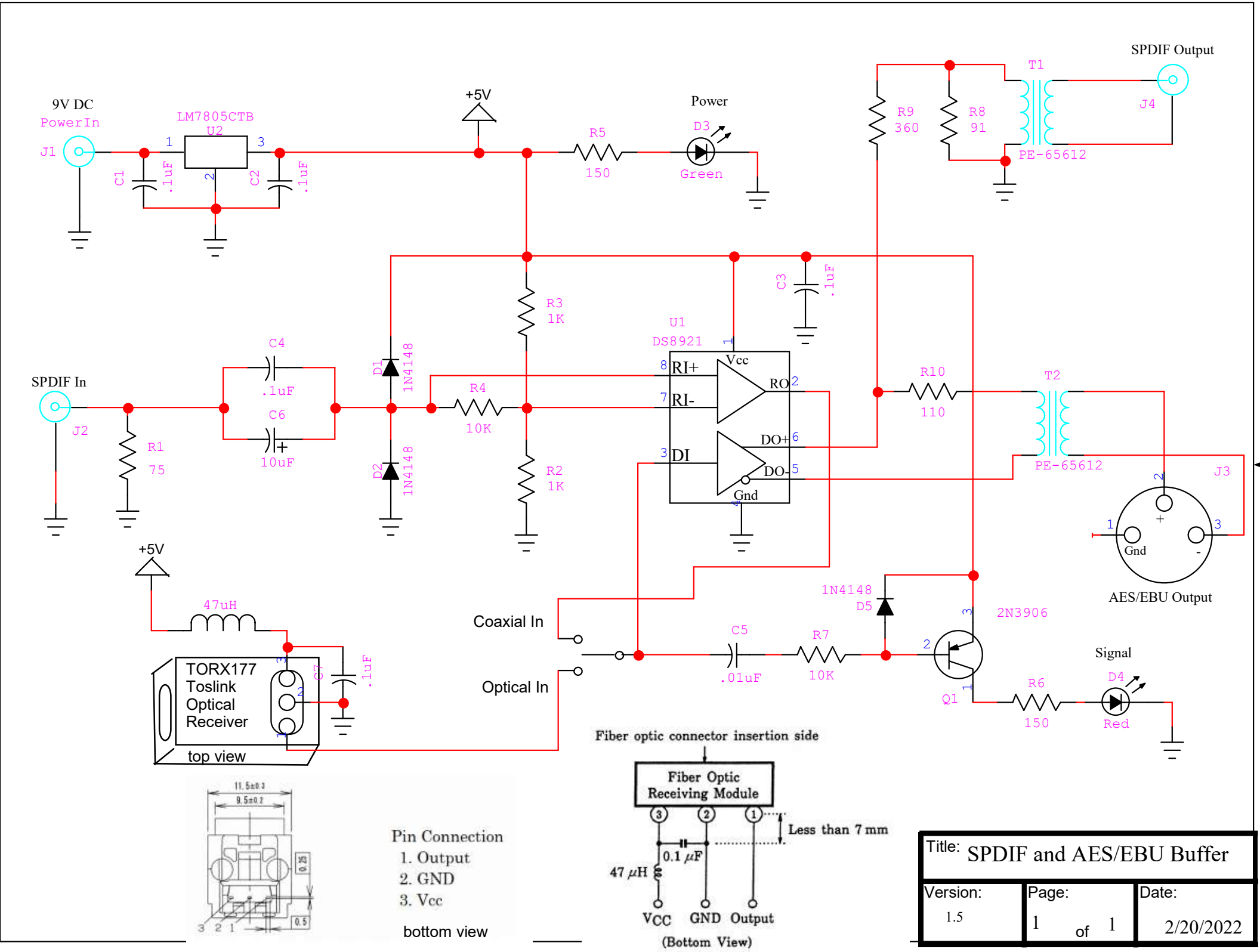

Title: SPDIF and AES/EBU Buffer		
Version: 1.5	Page: 1 of 1	Date: 2/20/2022